Work Order ID 65575

January 20, 2011 9:14:18 AM

Item ID: D3535-35 **Accept** **Setup Start**

Revision ID: **Stop**

Item Name: Wearshoe

Start Date: 1/20/11 **Start Qty:** 6.00 **Cust Item ID:**

Required Date: 2/04/11 **Req'd Qty:** 6.00 **Customer:**

Reference:

Approvals: **Process Plan:** CL **Date:** 1/10/20 **Tooling:** **Date:** **Run Start**

QC: **Date:** **SPC (Y/N):** **Date:** **Stop**

Sequence ID/ Work Center ID	Operation Description	Set Up/ Run Hours	Tool ID	Tool #	Plan Code	Accept Qty	Reject Qty	Reject Number	Insp. Stamp
Draw Nbr	**Revision Nbr**								
D3535	Rev B								
100	FLOW WATER JET	0.00							
Waterjet	**Memo**	0.00				RB 11-1-20			
FLOW CNC Waterjet	1-Cut as per Dwg D3535 ☐Dwg Rev: B ☐Prog Rev: B ☐2- Deburr if necessary								
304 .040									
110	QC2- Inspect parts off machine FAI/FAIB	0.00							
QC	**Memo**	0.00				RB 11-1-20			
Quality Control									
120	QC8- Inspect parts - second check	0.00							
QC	**Memo**	0.00							
Quality Control									

8 wa 121

Dart Aerospace Ltd

W/O:		WORK ORDER CHANGES					
DATE	STEP	PROCEDURE CHANGE	By	Date	Qty	Approval Chief Eng / Prod Mgr	Approval QC Inspector

Part No: _____ **PAR #:** _____ **Fault Category:** _____ **NCR:** Yes No **DQA:** _____ **Date:** _____

Resolution: _____ **Disposition:** _____ **QA: N/C Closed:** _____ **Date:** _____

NCR:		WORK ORDER NON-CONFORMANCE (NCR)						
DATE	STEP	Description of NC Section A	Corrective Action Section B			Verification Section C	Approval Chief Eng	Approval QC Inspector
			Initial Chief Eng	Action Description Chief Eng	Sign & Date			

NOTE: Date & initial all entries

H:\FORMS\Quality Assurance\approved QA\NCRWO RevE

Work Order ID 65575

January 20, 2011 9:14:18 AM

Item ID: D3535-35 **Accept** **Setup Start**

Revision ID:

Item Name: Wearshoe **Stop**

Start Date: 1/20/11 **Start Qty:** 6.00 **Cust Item ID:**

Required Date: 2/04/11 **Req'd Qty:** 6.00 **Customer:**

Reference:

Approvals: **Process Plan:** _____ **Date:** _____ **Tooling:** _____ **Date:** _____ **Run Start**

QC: _____ **Date:** _____ **SPC (Y/N):** _____ **Date:** _____ **Stop**

Sequence ID/ Work Center ID	Operation Description	Set Up/ Run Hours	Tool ID	Tool #	Plan Code	Accept Qty	Reject Qty	Reject Number	Insp. Stamp
130	NC BRAKE	0.00				6			
Brake NC	Memo	0.00							
Brake NC	1-Deburr if necessary□2-Form on Brake as per Dwg D3535 using Jigs DT8261and DT8326.□3-Identify as D3535-35. SB 11/01/28								
140	QC5- Inspect part completeness to step on W/O	0.00							
QC	Memo	0.00							
Quality Control									
150	Grey Sandtex(Ref:4.3.5.6) per QSI005 4.3 M 115128	0.00				6	BL 11-02-1		
Powdercoat	Memo	0.00							
Powder Coating	START TIME: 320 1:30 □OVEN TEMPERATURE: □FINISH TIME: 2100								

Dart Aerospace Ltd

W/O:		WORK ORDER CHANGES					
DATE	STEP	PROCEDURE CHANGE	By	Date	Qty	Approval Chief Eng / Prod Mgr	Approval QC Inspector

Part No: _____ **PAR #:** _____ **Fault Category:** _____ **NCR:** Yes No **DQA:** _____ **Date:** _____

Resolution: _____ **Disposition:** _____ **QA: N/C Closed:** _____ **Date:** _____

NCR:		WORK ORDER NON-CONFORMANCE (NCR)						
DATE	STEP	Description of NC Section A	Corrective Action Section B			Verification Section C	Approval Chief Eng	Approval QC Inspector
			Initial Chief Eng	Action Description Chief Eng	Sign & Date			

NOTE: Date & initial all entries

H:\fFORMS\Quality Assurance\approved QA\NCRWO RevE

Work Order ID 65575

January 20, 2011 9:14:18 AM

Item ID: D3535-35 **Accept** **Setup Start**

Revision ID:

Item Name: Wearshoe **Stop**

Start Date: 1/20/11 **Start Qty:** 6.00 **Cust Item ID:**

Required Date: 2/04/11 **Req'd Qty:** 6.00 **Customer:**

Reference:

Run Start

Approvals: **Process Plan:** _____ **Date:** _____ **Tooling:** _____ **Date:** _____

Stop

QC: _____ **Date:** _____ **SPC (Y/N):** _____ **Date:** _____

Sequence ID/ Work Center ID	Operation Description	Set Up/ Run Hours	Tool ID	Tool #	Plan Code	Accept Qty	Reject Qty	Reject Number	Insp. Stamp
160	QC3- Inspect Part Finish	0.00							
QC	Memo	0.00	=> JL	11/02/01		X6	Ø		
Quality Control									
170	Identify as per dwg & Stock Location: FP-18	0.00							
Packaging	Memo	0.00				BL	11-02-1		
Packaging									
180	QC21- Final Inspection - Work Order Release	0.00							
QC	Memo	0.00					11/02/02		
Quality Control									

MF
11-02-01

Dart Aerospace Ltd

W/O:		WORK ORDER CHANGES					
DATE	STEP	PROCEDURE CHANGE	By	Date	Qty	Approval Chief Eng / Prod Mgr	Approval QC Inspector

Part No: _____ **PAR #:** _____ **Fault Category:** _____ **NCR:** Yes No **DQA:** _____ **Date:** _____

Resolution: _____ **Disposition:** _____ **QA: N/C Closed:** _____ **Date:** _____

NCR:		WORK ORDER NON-CONFORMANCE (NCR)						
DATE	STEP	Description of NC Section A	Corrective Action Section B			Verification Section C	Approval Chief Eng	Approval QC Inspector
			Initial Chief Eng	Action Description Chief Eng	Sign & Date			

NOTE: Date & initial all entries

H:\fFORMS\Quality Assurance\approved QA\NCRWO RevE

Picklist Print

January 20, 2011 9:14:18 AM

Work Order ID: 65575

Parent Item: D3535-35

Parent Item Name: Wearshoe

Start Date: 1/20/11 **Required Date:** 2/04/11

Start Qty: 6.00 **Required Qty:** 6.00

Comments: IPP Rev:A New Issue 07-02-15 JLM
IPP Rev:B As per Rev B 07-08-31 JLM Verified By:EC

Component Item ID/ Item Name	Replacement Item ID	Mfg/ Purch	Bin Item	Primary Location	Last Location	Route Seq ID	Unit of Measure	Qty on Hand	Qty per Kit	Total Qty	Qty Issued	Date Issued	Status
M304S20GA 304/316 .040 Sheet		Purchased	No			100	sf	194.9000	0.8022	5.066526 HB11-1-20			

Location	Loc Qty	Loc Code
MAT	194.9	
115953	32.1	
116437	66.8	
116623	96	

116437

B

Dart Aerospace Ltd

W/O:		WORK ORDER CHANGES					
DATE	STEP	PROCEDURE CHANGE	By	Date	Qty	Approval Chief Eng / Prod Mgr	Approval QC Inspector

Part No: _____ **PAR #:** _____ **Fault Category:** _____ **NCR:** Yes No **DQA:** _____ **Date:** _____

Resolution: _____ **Disposition:** _____ **QA: N/C Closed:** _____ **Date:** _____

NCR:		WORK ORDER NON-CONFORMANCE (NCR)						
DATE	STEP	Description of NC Section A	Corrective Action Section B			Verification Section C	Approval Chief Eng	Approval QC Inspector
			Initial Chief Eng	Action Description Chief Eng	Sign & Date			

NOTE: Date & initial all entries

H:\fFORMS\Quality Assurance\approved QA\NCRWO RevE

DART AEROSPACE LTD	Work Order:	65575
Description: Wearshoe	Part Number:	D3535-35
Inspection Dwg: D3535 **Rev:** B		Page 1 of 1

FIRST ARTICLE INSPECTION CHECKLIST

[X] First Article [ ] Prototype

Drawing Dimension	Tolerance	Actual Dimension	Accept	Reject	Method of Inspection	Comments
2.000	+/-0.010	2.000	✓		V HB02	
1.885	+/-0.010	1.885	✓		V	
6.00	+/-0.030	6.00	✓		T HB01	
6.75	+/-0.030	6.75	✓		T	
Ø0.188	+0.005/-0.001	.193	✓		V	
23.250	+/-0.010	23.250	✓		T	
19.750	+/-0.010	19.750	✓		T	
17.750	+/-0.010	17.750	✓		T	
14.250	+/-0.010	14.250	✓		T	
9.500	+/-0.010	9.500	✓		T	
4.750	+/-0.010	4.750	✓		T	
0.300	+/-0.010	.304	✓		V	
0.300	+/-0.010	.305	✓		V	
0.038	+/-0.010	.1034	✓		V	

Measured by:	HB	Audited by:	S	Prototype Approval:	N/A
Date:	11-1-20	Date:	11/01/21	Date:	N/A

Rev	Date	Change	Revised by	Approved
A	07.05.10	New Issue	KJ/JLM	

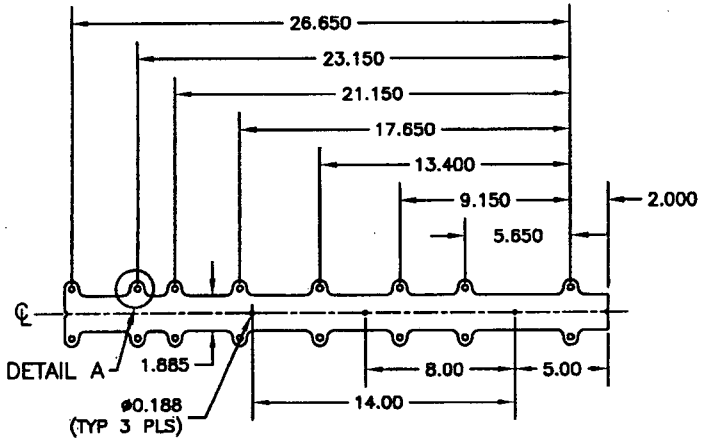

D3535-11F FLAT PATTERN

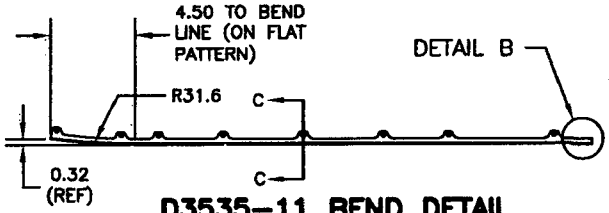

D3535-11 BEND DETAIL

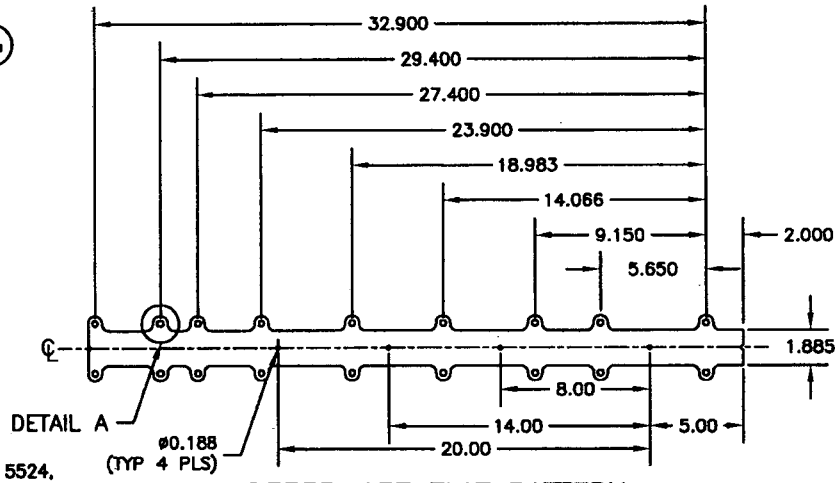

D3535-13F FLAT PATTERN

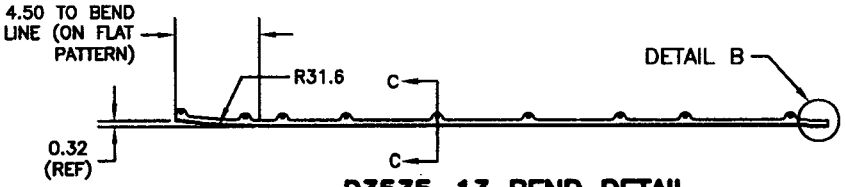

D3535-13 BEND DETAIL

NOTES

1) MATERIAL: AISI 304/316 SS SHEET PER AMS 5513 OR AMS 5524, 20 GAUGE (0.038 THICK) (REF DART SPEC M304S20GA)
2) FINISH: POWDER COAT GREY SANDTEX (4.3.5.6) PER QSI 005 4.3
3) PART IS SYMMETRICAL ABOUT ℄
4) TOLERANCES ARE PER DART QSI 018 UNLESS OTHERWISE NOTED
5) ALL DIMENSIONS ARE IN INCHES
6) BREAK ALL SHARP EDGES TO 0.010 MAX
7) IDENTIFY WITH DART P/N USING WHITE FINE POINT PAINT MARKER
8) SEE PAGE 7 FOR DETAILS AND SECTION

RELEASED
07.04.24

SHOP COPY
RETURN TO
ENGINEERING
UNCONTROLLED COPY
SUBJECT TO AMENDMENT
WITHOUT NOTICE
WORK ORDER
NO. 63513
08/11/10/20

DART

DESIGN C.B	DRAWN BY PH	DART AEROSPACE USA, INC. PORT HADLOCK, WA	
CHECKED	APPROVED	DRAWING NO. D3535	REV. B
DATE 07.04.17		TITLE WEARSHOE	SHEET 1 OF 7
			SCALE 1:10

A	06.10.25	NEW ISSUE
B	07.04.17	MOVE TAB OUTBOARD, ADD AMS SPEC

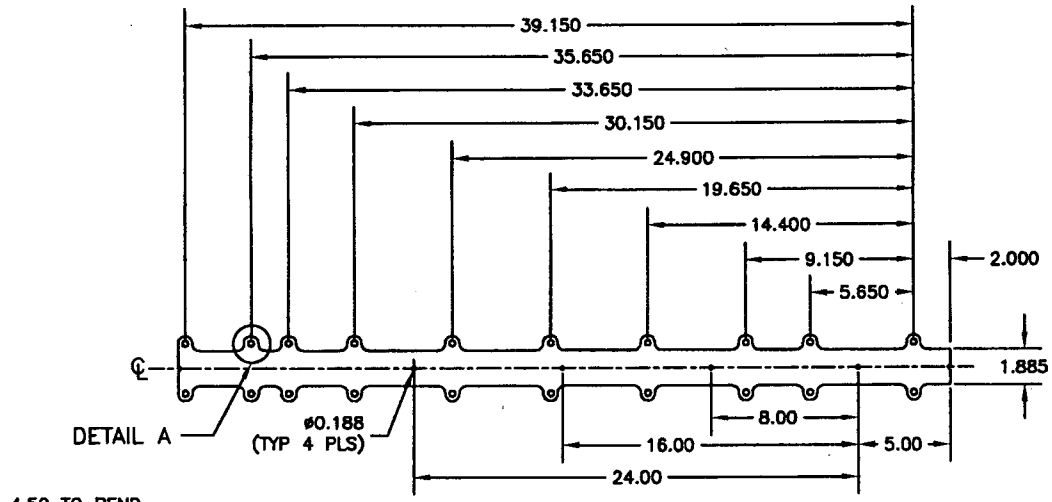

D3535-15F FLAT PATTERN

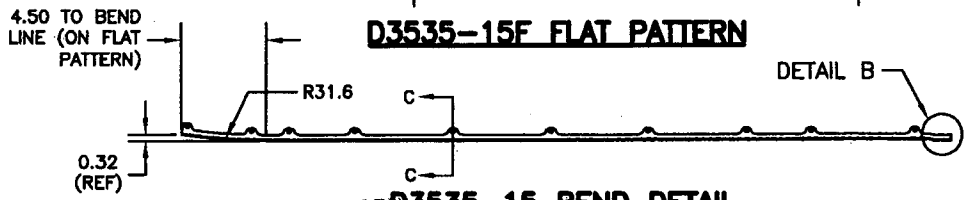

D3535-15 BEND DETAIL

SHOP COPY
RETURN TO
ENGINEERING
UNCONTROLLED COPY
SUBJECT TO AMENDMENT
WITHOUT NOTICE
WORK ORDER
NO. 65575

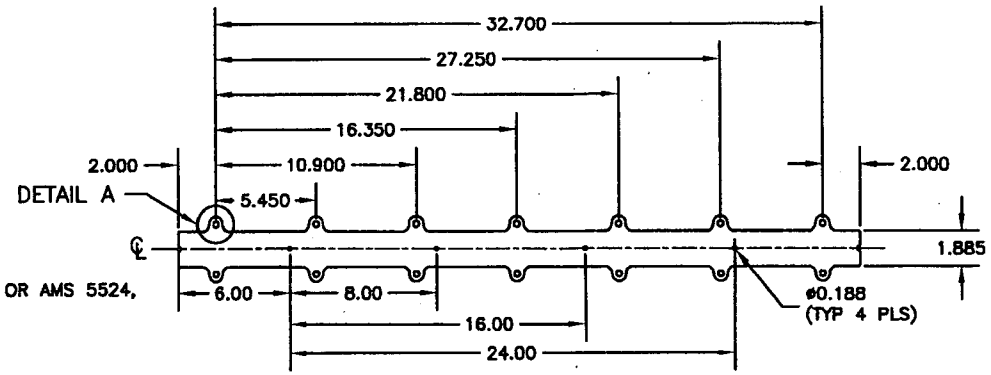

D3535-21F FLAT PATTERN

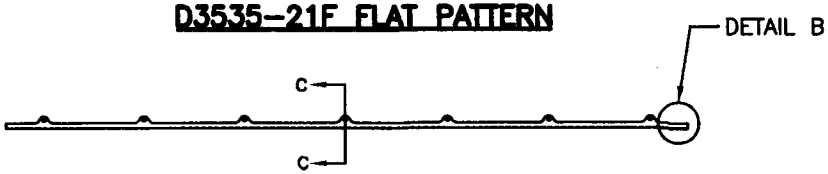

D3535-21 BEND DETAIL

NOTES

1) MATERIAL: AISI 304/316 SS SHEET PER AMS 5513 OR AMS 5524, 20 GAUGE (0.038 THICK) (REF DART SPEC M304S20GA)
2) FINISH: POWDER COAT GREY SANDTEX (4.3.5.6) PER QSI 005 4.3
3) PART IS SYMMETRICAL ABOUT ℄
4) TOLERANCES ARE PER DART QSI 018 UNLESS OTHERWISE NOTED
5) ALL DIMENSIONS ARE IN INCHES
6) BREAK ALL SHARP EDGES TO 0.010 MAX
7) IDENTIFY WITH DART P/N USING WHITE FINE POINT PAINT MARKER
8) SEE PAGE 7 FOR DETAILS AND SECTION

RELEASED
07.04.24

DART

DESIGN	DRAWN BY	DART AEROSPACE USA, INC. PORT HADLOCK, WA	
CB	PH		REV. B
CHECKED	APPROVED	DRAWING NO. D3535	SHEET 2 OF 7
DATE 07.04.17		TITLE WEARSHOE	SCALE 1:10

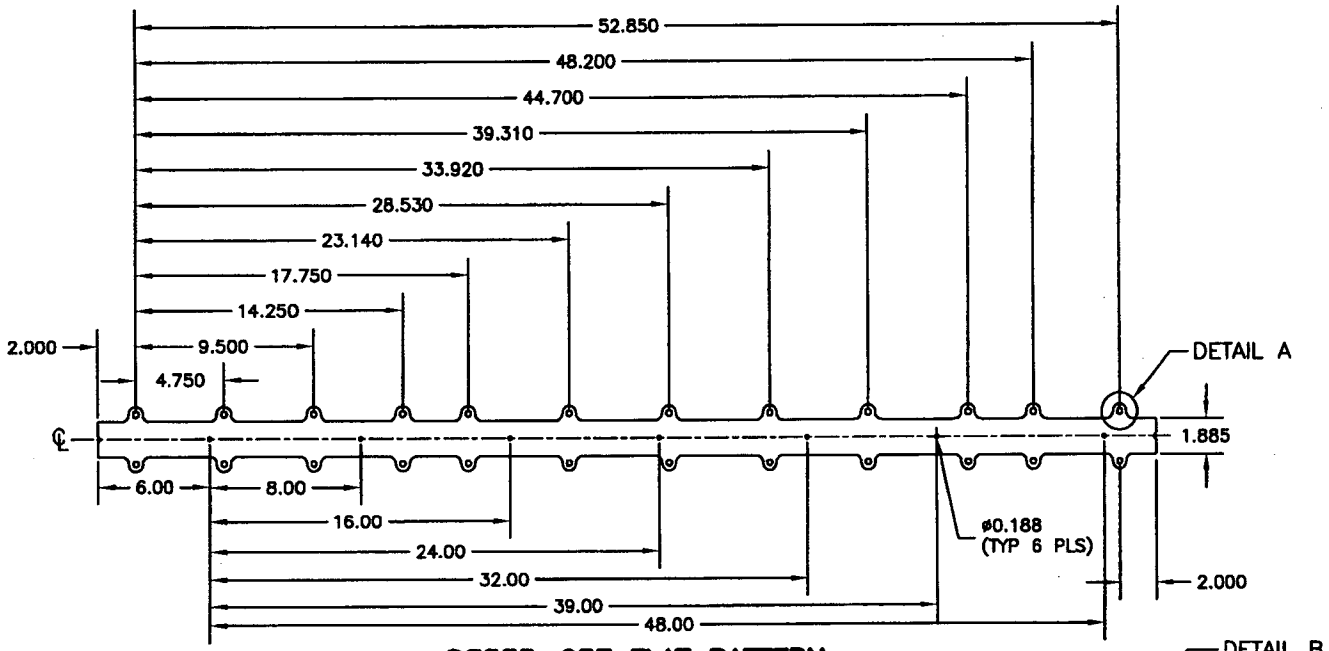

D3535-23F FLAT PATTERN

D3535-23 BEND DETAIL

SHOP COPY
RETURN TO
ENGINEERING
UNCONTROLLED COPY
SUBJECT TO AMENDMENT
WITHOUT NOTICE
WORK ORDER
NO. 65575

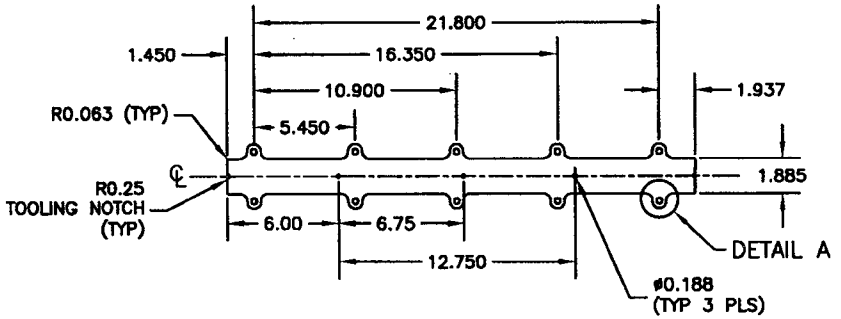

D3535-25F FLAT PATTERN

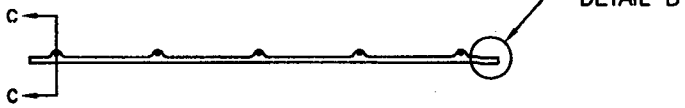

D3535-25 BEND DETAIL

NOTES

1) MATERIAL: AISI 304/316 SS SHEET PER AMS 5513 OR AMS 5524, 20 GAUGE (0.038 THICK) (REF DART SPEC M304S20GA)
2) FINISH: POWDER COAT GREY SANDTEX (4.3.5.6) PER QSI 005 4.3
3) PART IS SYMMETRICAL ABOUT ℄
4) TOLERANCES ARE PER DART QSI 018 UNLESS OTHERWISE NOTED
5) ALL DIMENSIONS ARE IN INCHES
6) BREAK ALL SHARP EDGES TO 0.010 MAX
7) IDENTIFY WITH DART P/N USING WHITE FINE POINT PAINT MARKER
8) SEE PAGE 7 FOR DETAILS AND SECTION

RELEASED
07.04.24

DESIGN	DRAWN BY	DART AEROSPACE USA, INC. PORT HADLOCK, WA	
CB	PH		
CHECKED	APPROVED	DRAWING NO. D3535	REV. B
DATE 07.04.17		TITLE WEARSHOE	SHEET 3 OF 7
			SCALE 1:10

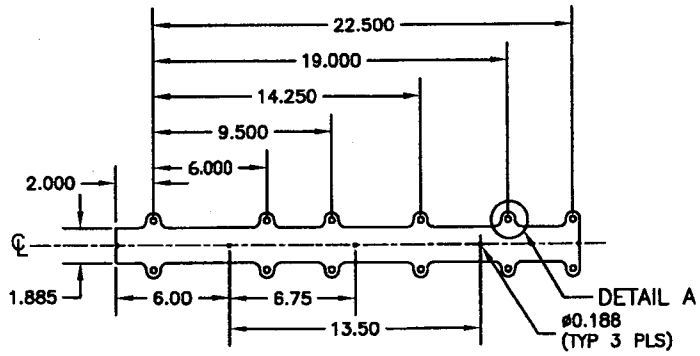

D3535-31F FLAT PATTERN

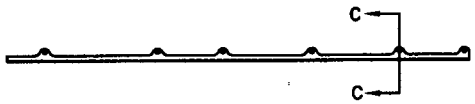

D3535-31 BEND DETAIL

RELEASED
07.04.24

SHOP COPY
RETURN TO
ENGINEERING
UNCONTROLLED COPY
SUBJECT TO AMENDMENT
WITHOUT NOTICE
WORK ORDER
NO. 65575

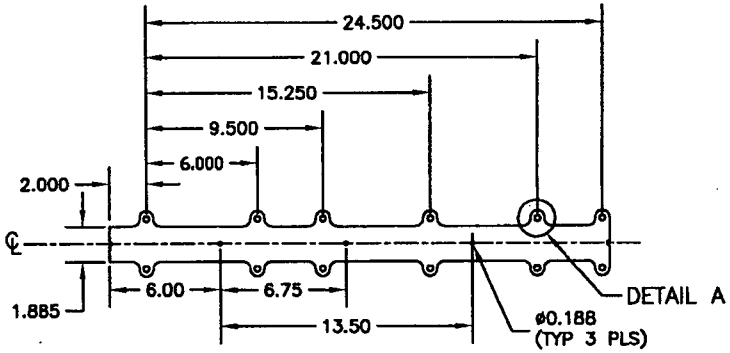

D3535-33F FLAT PATTERN

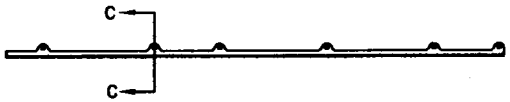

D3535-33 BEND DETAIL

NOTES

1) MATERIAL: AISI 304/316 SS SHEET PER AMS 5513 OR AMS 5524, 20 GAUGE (0.038 THICK) (REF DART SPEC M304S20GA)
2) FINISH: POWDER COAT GREY SANDTEX (4.3.5.6) PER QSI 005 4.3
3) PART IS SYMMETRICAL ABOUT ℄
4) TOLERANCES ARE PER DART QSI 018 UNLESS OTHERWISE NOTED
5) ALL DIMENSIONS ARE IN INCHES
6) BREAK ALL SHARP EDGES TO 0.010 MAX
7) IDENTIFY WITH DART P/N USING WHITE FINE POINT PAINT MARKER
8) SEE PAGE 7 FOR DETAILS AND SECTION

DESIGN CB	DRAWN BY PH	DART AEROSPACE USA, INC. PORT HADLOCK, WA	
CHECKED	APPROVED	DRAWING NO. D3535	REV. B
DATE 07.04.17		TITLE WEARSHOE	SHEET 4 OF 7
			SCALE 1:10

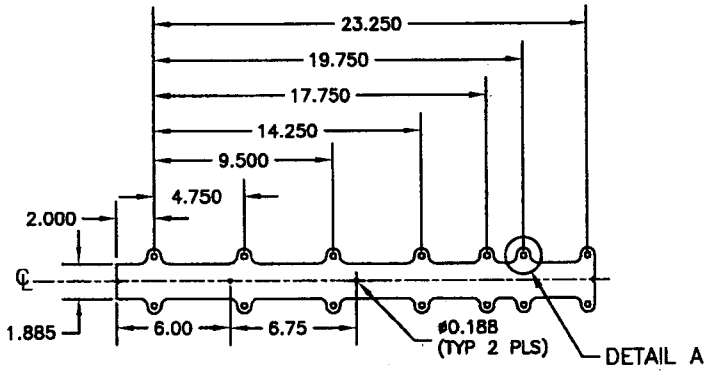

D3535-35F FLAT PATTERN

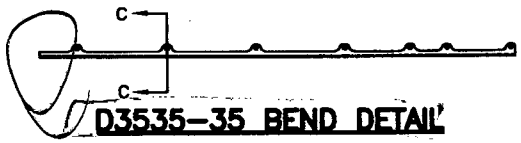

D3535-35 BEND DETAIL

RELEASED
07.04.24

SHOP COPY
RETURN TO
ENGINEERING
UNCONTROLLED COPY
SUBJECT TO AMENDMENT
WITHOUT NOTICE
WORK ORDER
NO. 65375

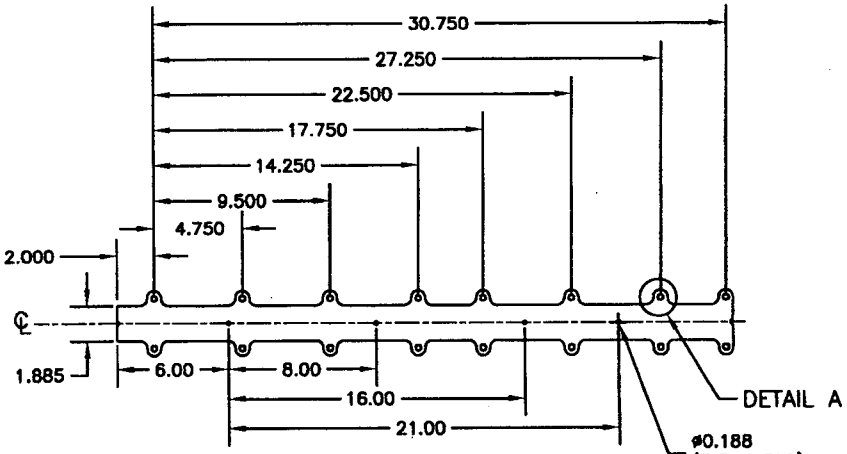

D3535-37F FLAT PATTERN

D3535-37 BEND DETAIL

NOTES

1) MATERIAL: AISI 304/316 SS SHEET PER AMS 5513 OR AMS 5524, 20 GAUGE (0.038 THICK) (REF DART SPEC M304S20GA)
2) FINISH: POWDER COAT GREY SANDTEX (4.3.5.6) PER QSI 005 4.3
3) PART IS SYMMETRICAL ABOUT ℄
4) TOLERANCES ARE PER DART QSI 018 UNLESS OTHERWISE NOTED
5) ALL DIMENSIONS ARE IN INCHES
6) BREAK ALL SHARP EDGES TO 0.010 MAX
7) IDENTIFY WITH DART P/N USING WHITE FINE POINT PAINT MARKER
8) SEE PAGE 7 FOR DETAILS AND SECTION

DART

DESIGN CB	DRAWN BY	DART AEROSPACE USA, INC. PORT HADLOCK, WA	
CHECKED	APPROVED	DRAWING NO. D3535	REV. B
DATE 07.04.17		TITLE WEARSHOE	SHEET 5 OF 7
			SCALE 1:10

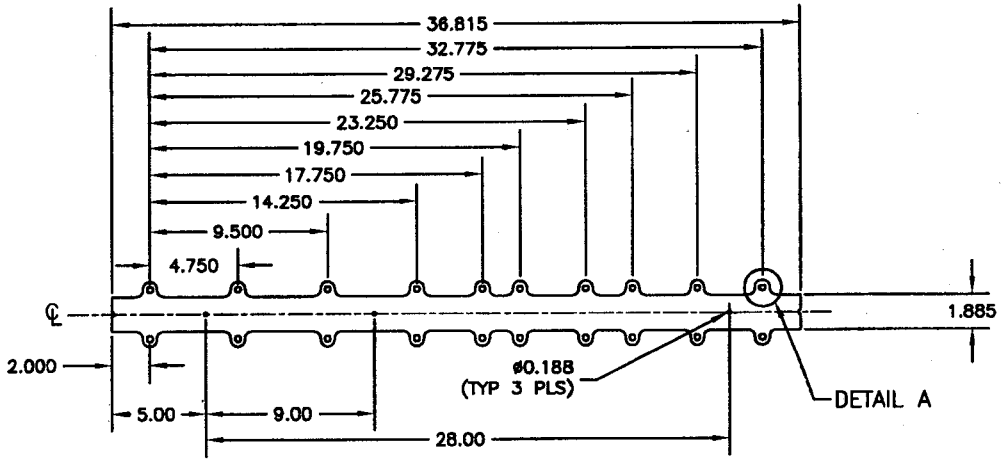

D3535-39F FLAT PATTERN

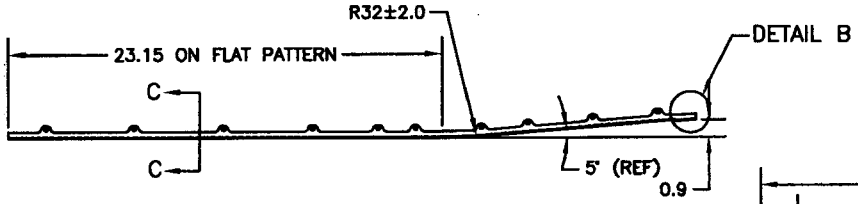

D3535-39 BEND DETAIL

SHOP COPY
RETURN TO
ENGINEERING
UNCONTROLLED COPY
SUBJECT TO AMENDMENT
WITHOUT NOTICE
WORK ORDER
NO. 65575

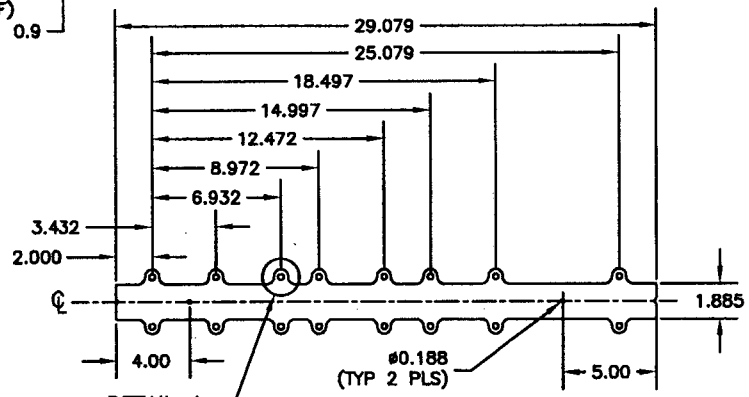

D3535-41F FLAT PATTERN

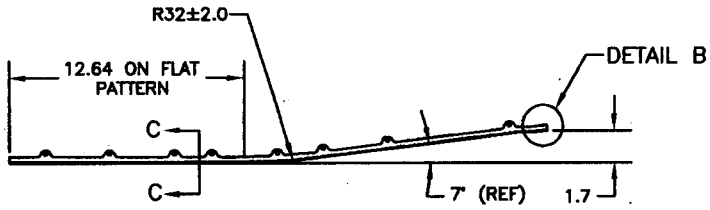

D3535-41 BEND DETAIL

NOTES

1) MATERIAL: AISI 304/316 SS SHEET PER AMS 5513 OR AMS 5524, 20 GAUGE (0.038 THICK) (REF DART SPEC M304S20GA)
2) FINISH: POWDER COAT GREY SANDTEX (4.3.5.6) PER QSI 005 4.3
3) PART IS SYMMETRICAL ABOUT ℄
4) TOLERANCES ARE PER DART QSI 018 UNLESS OTHERWISE NOTED
5) ALL DIMENSIONS ARE IN INCHES
6) BREAK ALL SHARP EDGES TO 0.010 MAX
7) IDENTIFY WITH DART P/N USING WHITE FINE POINT PAINT MARKER
8) SEE PAGE 7 FOR DETAILS AND SECTION

RELEASED
07.04.24

DART

DESIGN C.B	DRAWN BY PH	DART AEROSPACE USA, INC. PORT HADLOCK, WA	
CHECKED	APPROVED	DRAWING NO. D3535	REV. B
DATE 07.04.17		TITLE WEARSHOE	SHEET 6 OF 7
			SCALE 1:10

DESIGN	DRAWN BY	DART AEROSPACE USA, INC. PORT HADLOCK, WA	
CB	PH		
CHECKED	APPROVED	DRAWING NO. D3535	REV. B, SHEET 7 OF 7
DATE 07.04.17		TITLE WEARSHOE	SCALE 1:1

RELEASED
07.04.24

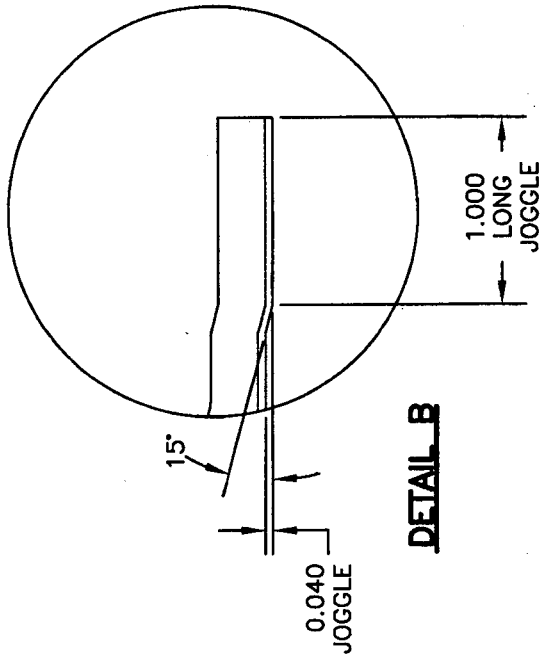

DETAIL B

SHOP COPY
RETURN TO
ENGINEERING
UNCONTROLLED COPY
SUBJECT TO AMENDMENT
WITHOUT NOTICE
WORK ORDER
NO. 63575

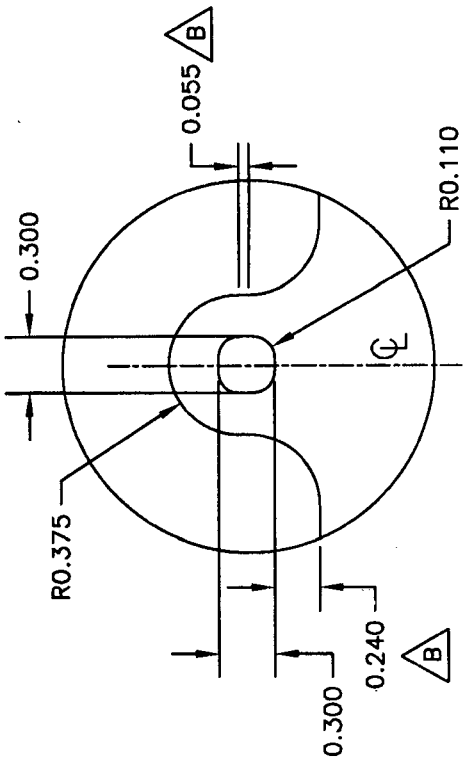

DETAIL A

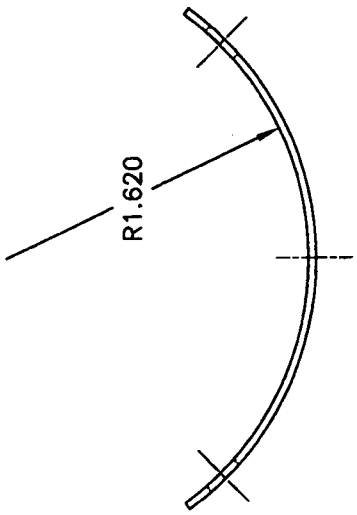

SECTION C–C